WYNDHAM COLLECTION

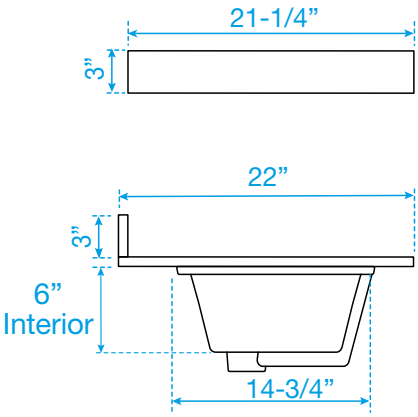

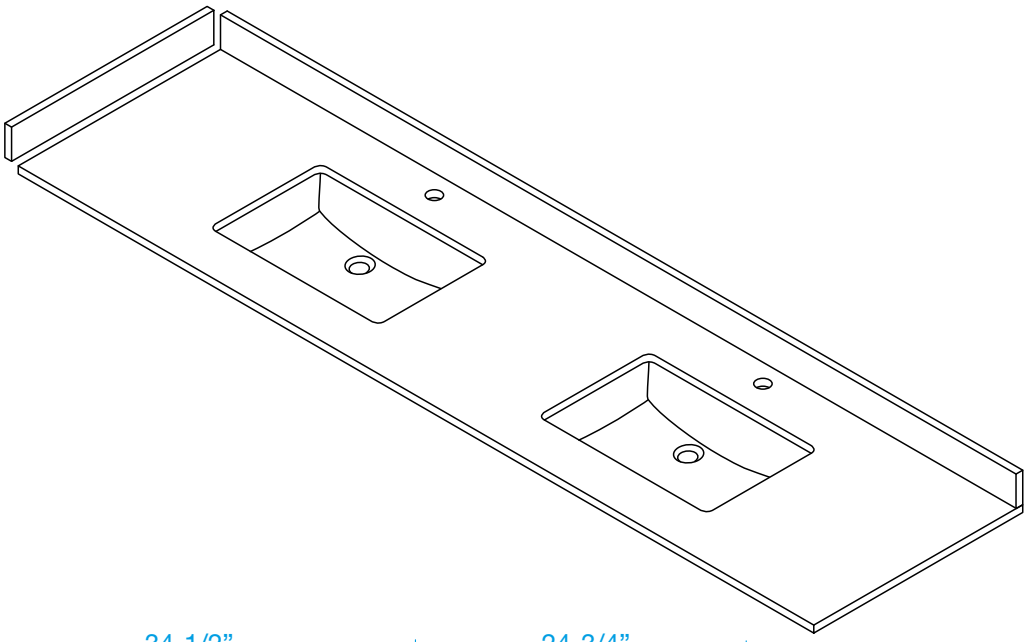

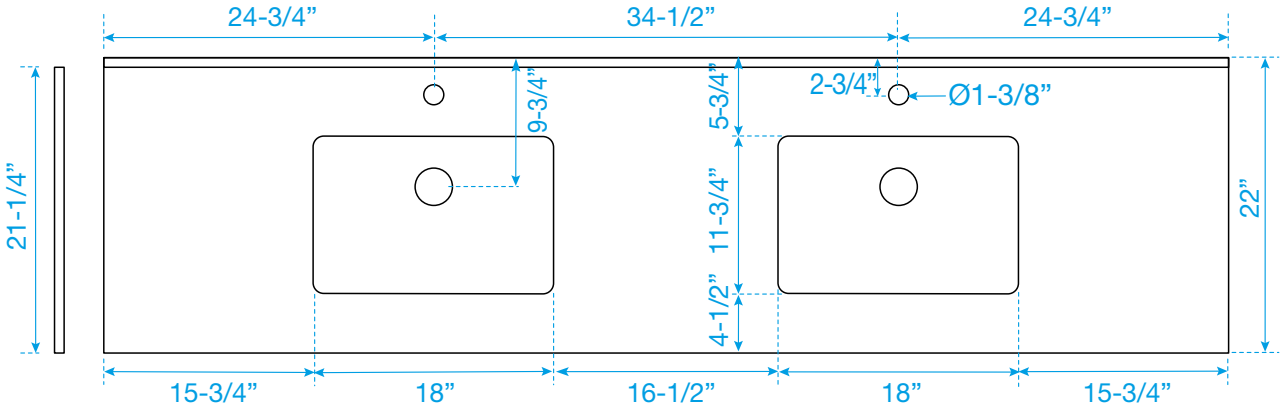

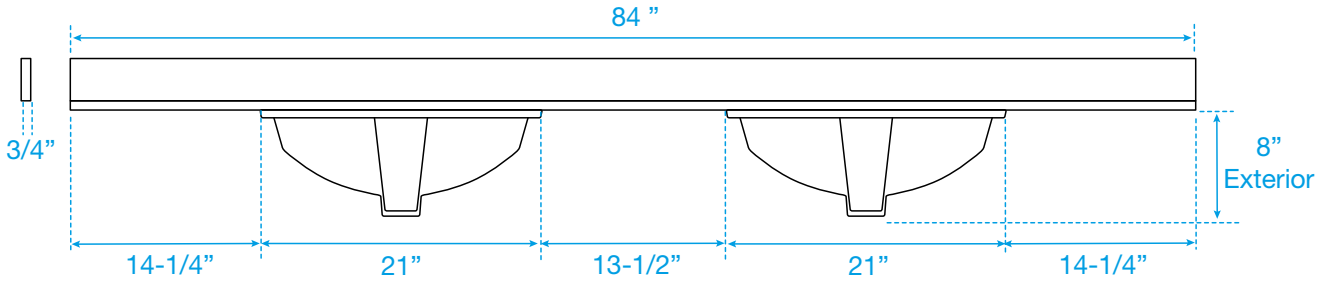

Note: Side splash is reversible. Due to high probability of breakage, the backsplash comes in two pieces, cut from the same piece. All measurements are ± 1/4”.

WC-QC1-84-DBL-TOP