WYNDHAM COLLECTION

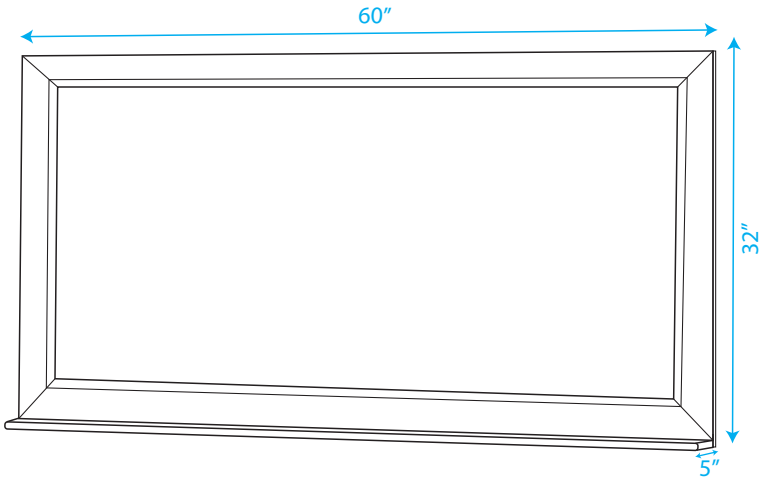

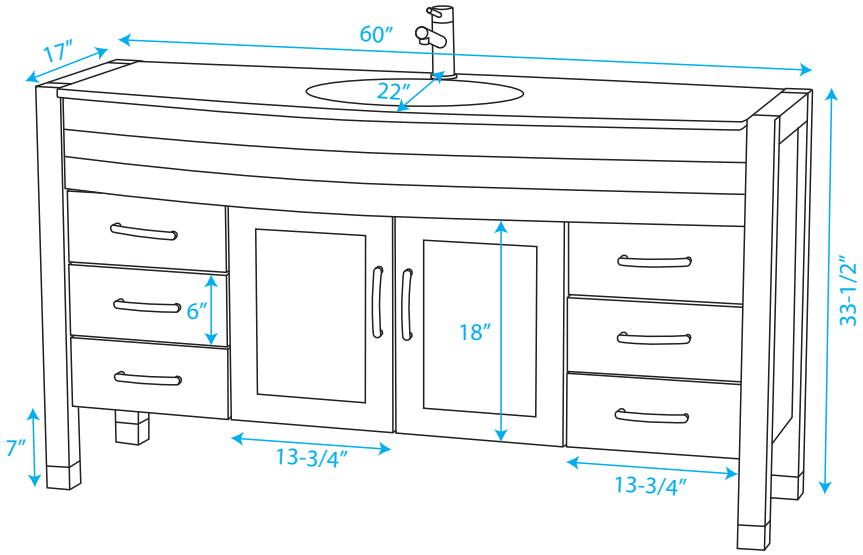

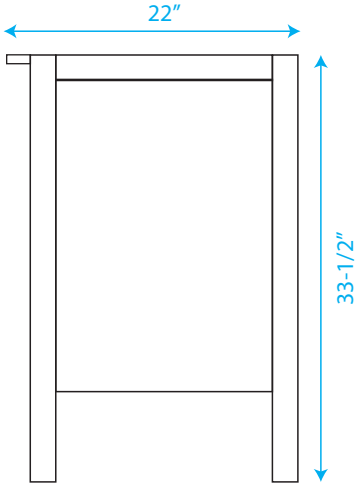

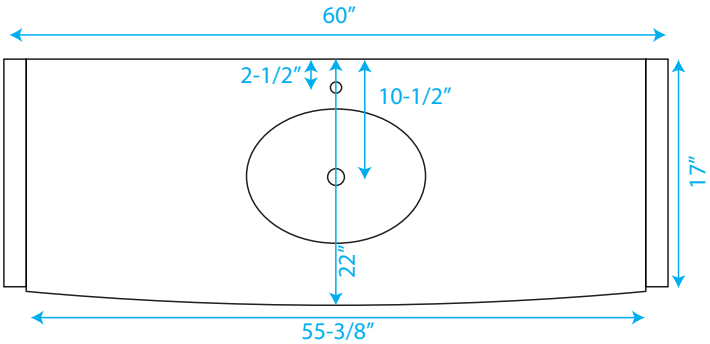

WC-A-W2109-60

with integrated sink