# WYNDHAM COLLECTION

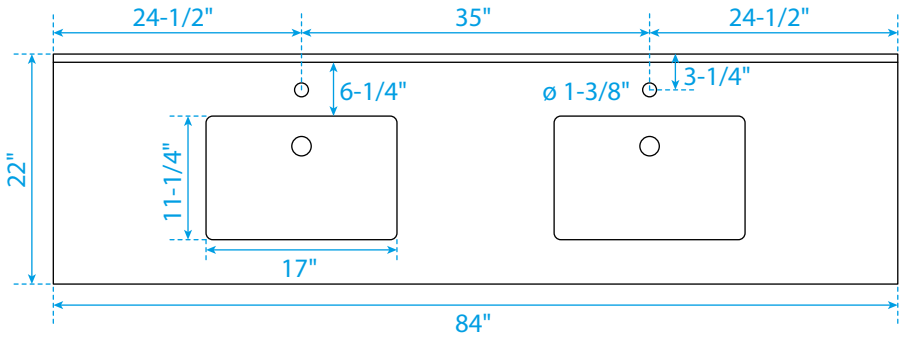


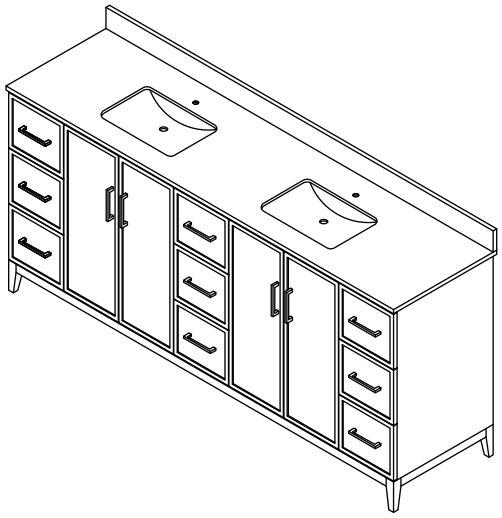

TOP VIEW OF VANITY CABINET

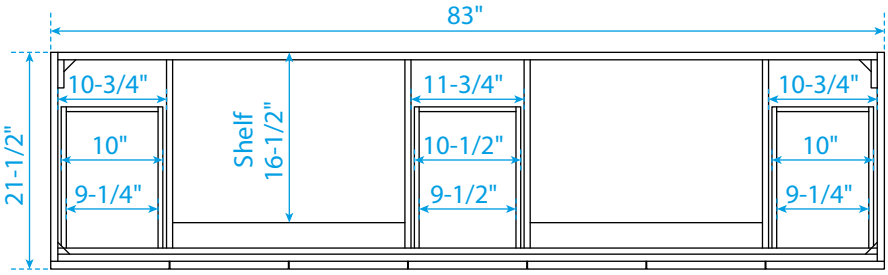


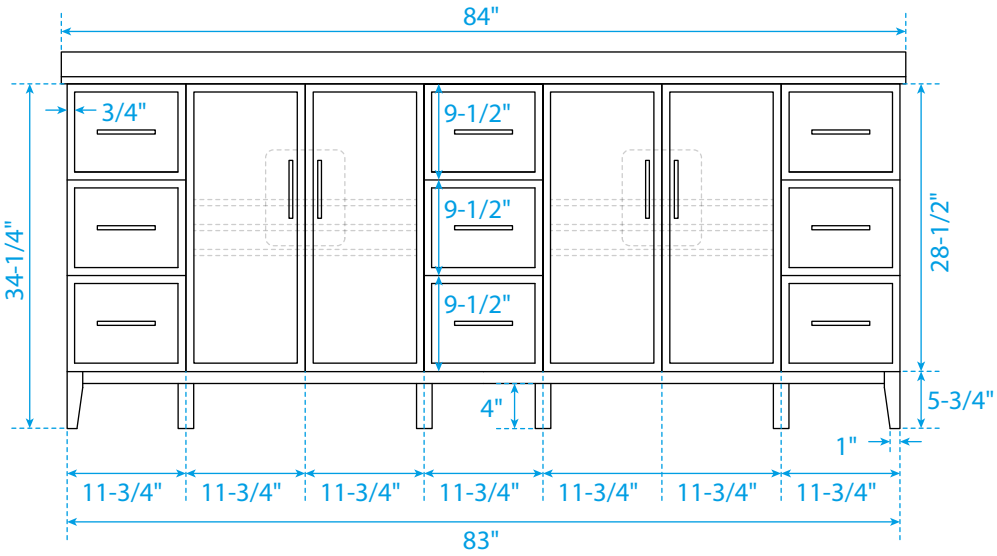


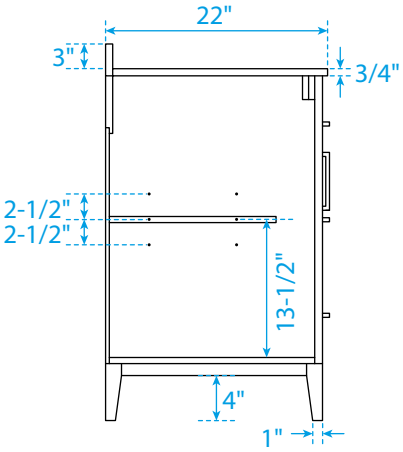


*Note: Due to high probability of breakage, the backsplash comes in two pieces, cut from the same piece. All measurements are ± 1/4".

# WC-7171-84-DBL