WYNDHAM COLLECTION

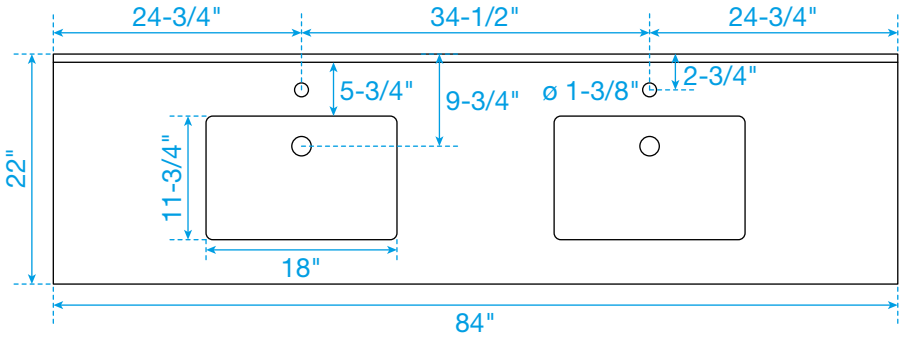

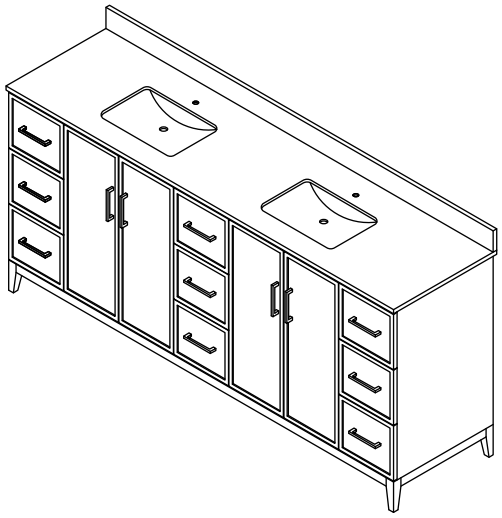

TOP VIEW OF VANITY CABINET

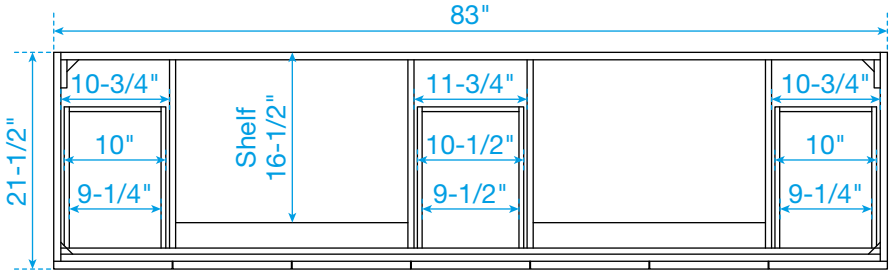

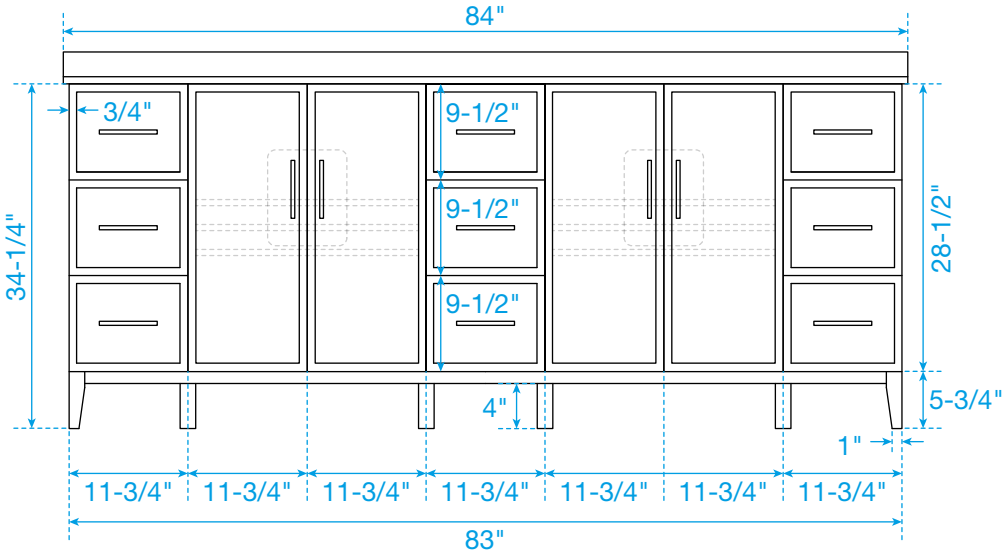

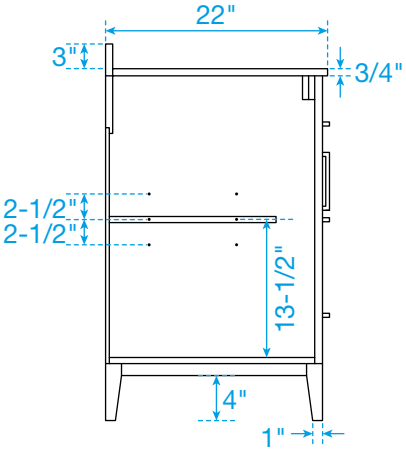

*Note: Due to high probability of breakage, the backsplash comes in two pieces, cut from the same piece. All measurements are ± 1/4".

WC-7171-84-DBL
Quartz