# WYNDHAM COLLECTION

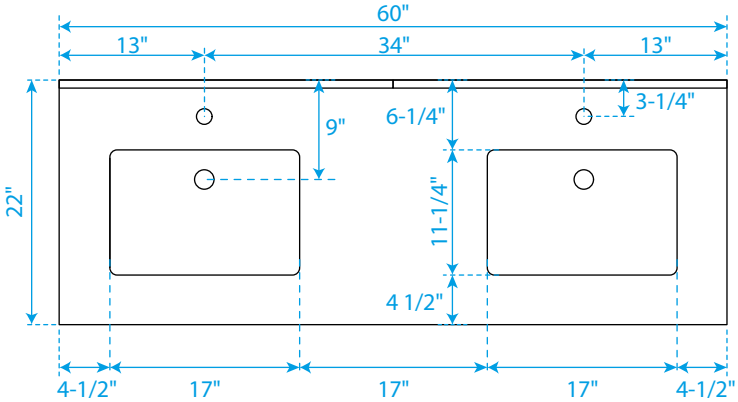


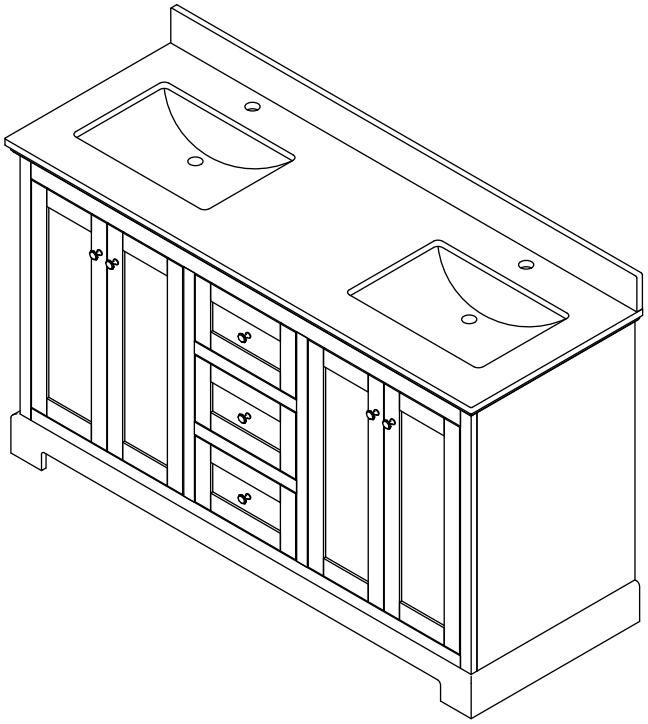

TOP VIEW OF VANITY CABINET

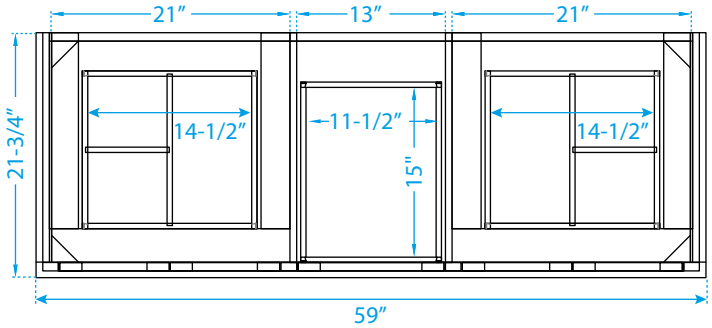


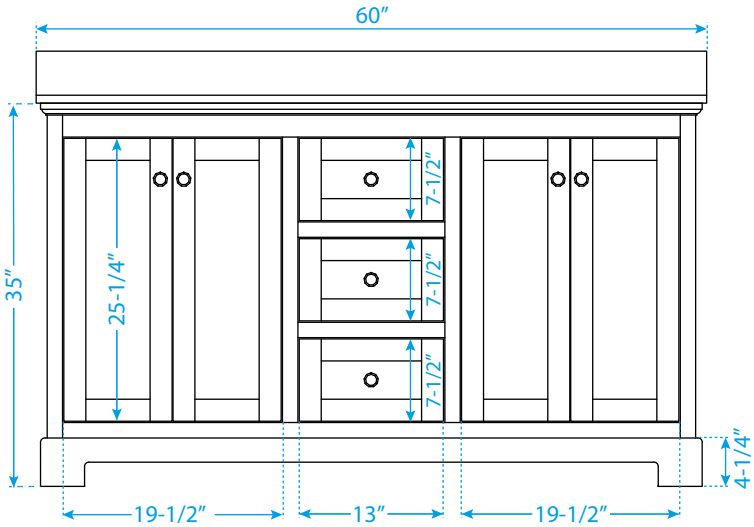


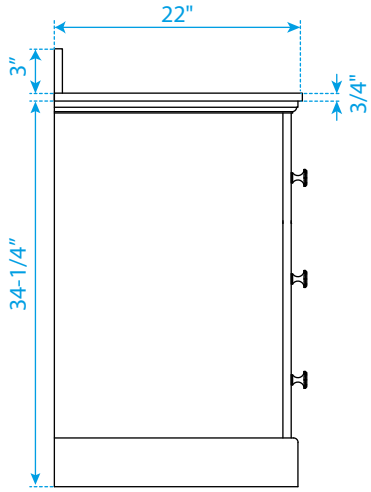


*Note: Countertop comes attached to the vanity cabinet.

*Note: Due to high probability of breakage, the backsplash comes in two pieces, cut from the same piece. All measurements are ±1/4″.

# WC-4040-60-DBL