WYNDHAM COLLECTION

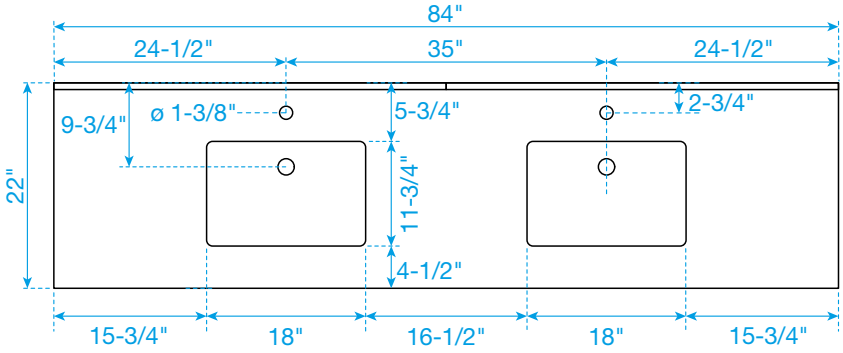

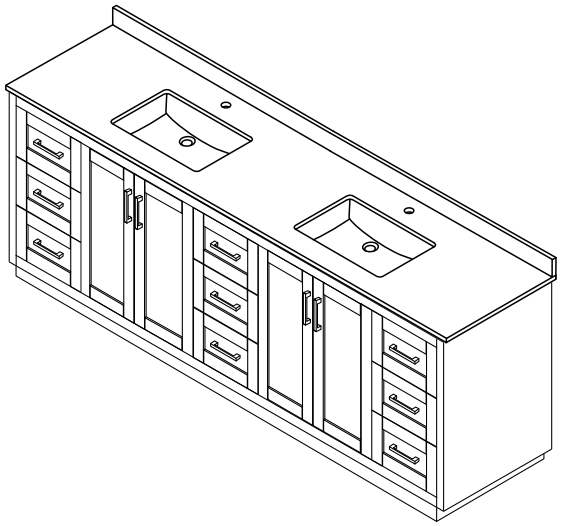

TOP VIEW OF VANITY CABINET

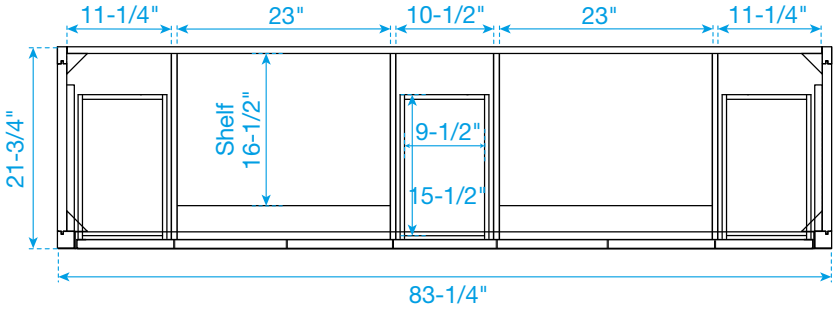

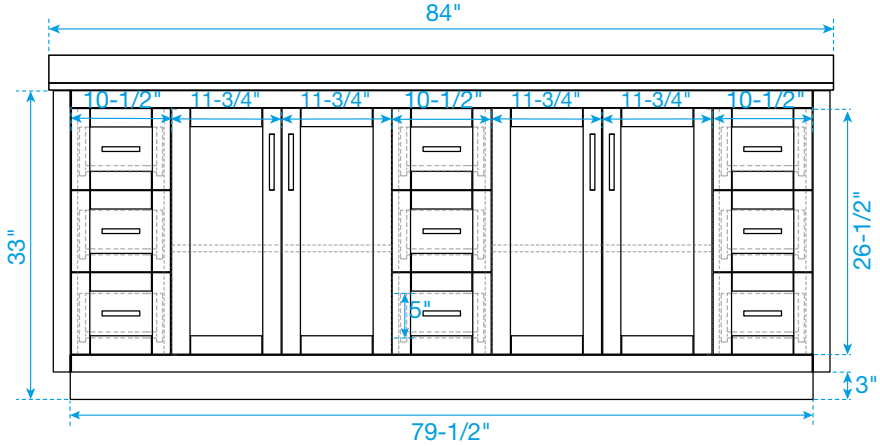

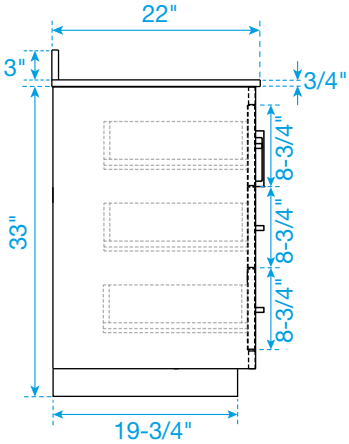

*Note: All measurements are ±1/4".

WC-2929-84-DBL
Quartz