WYNDHAM COLLECTION

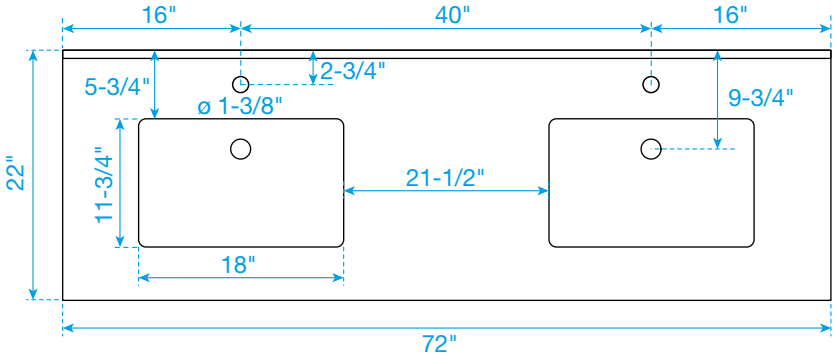

TOP VIEW OF VANITY CABINET

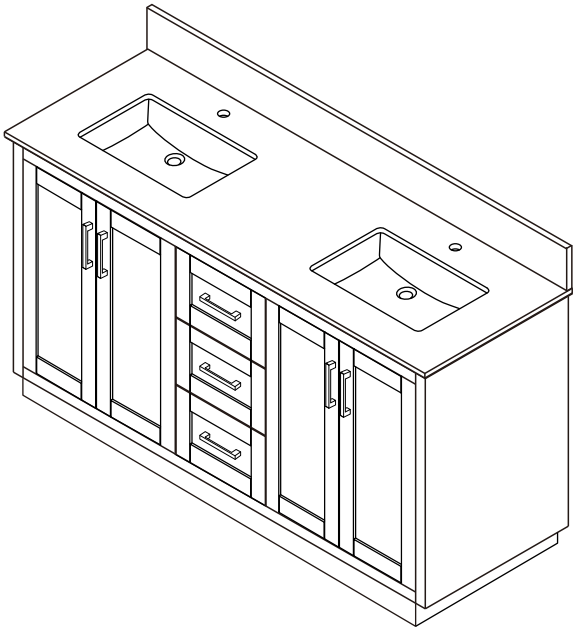

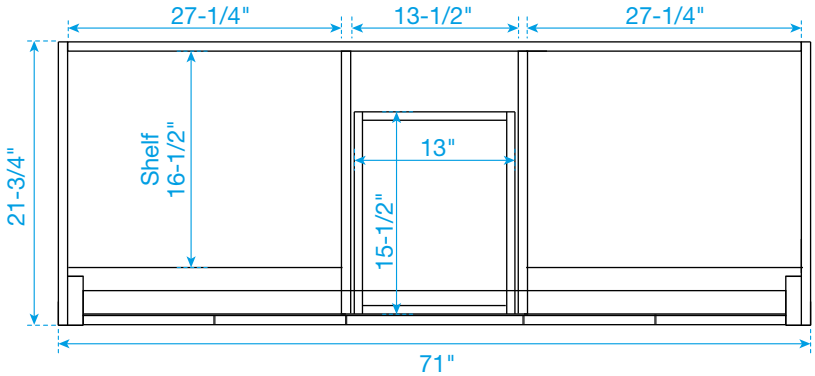

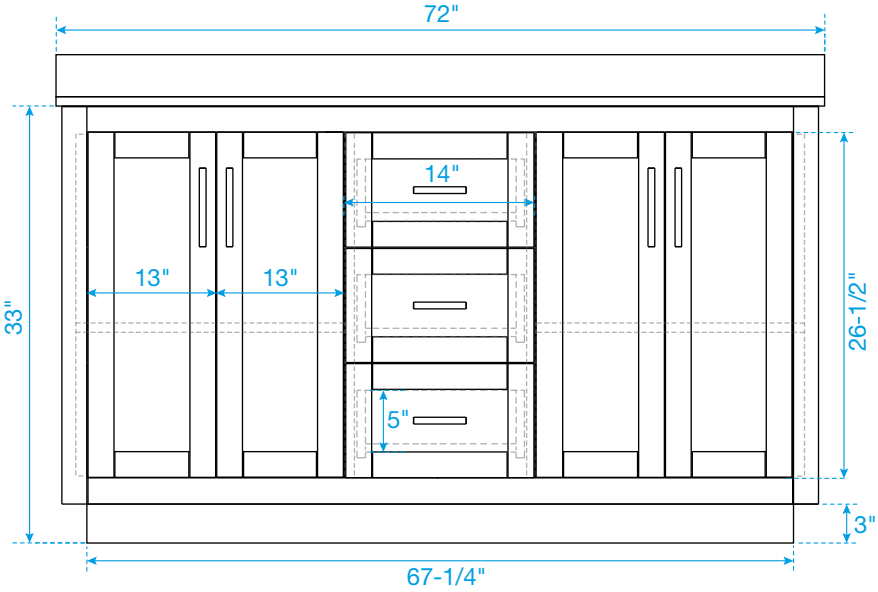

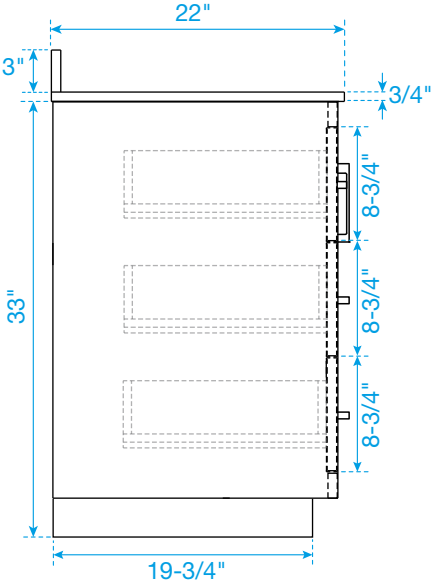

*Note: All measurements are ±1/4".

WC-2929-72-DBL
Quartz