WYNDHAM COLLECTION

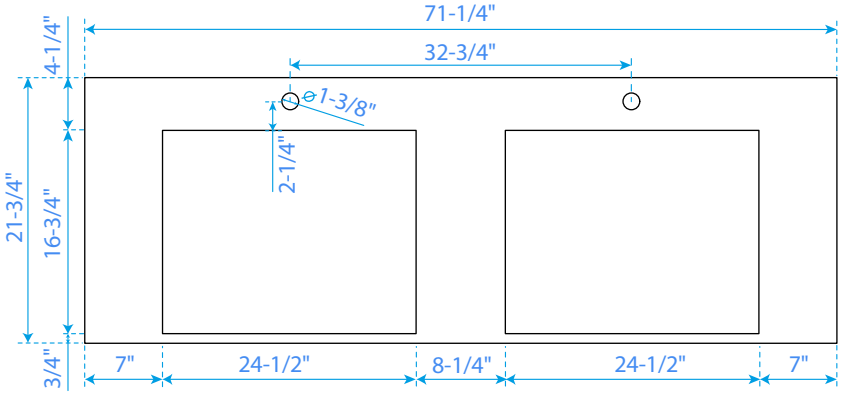

TOP VIEW OF VANITY CABINET

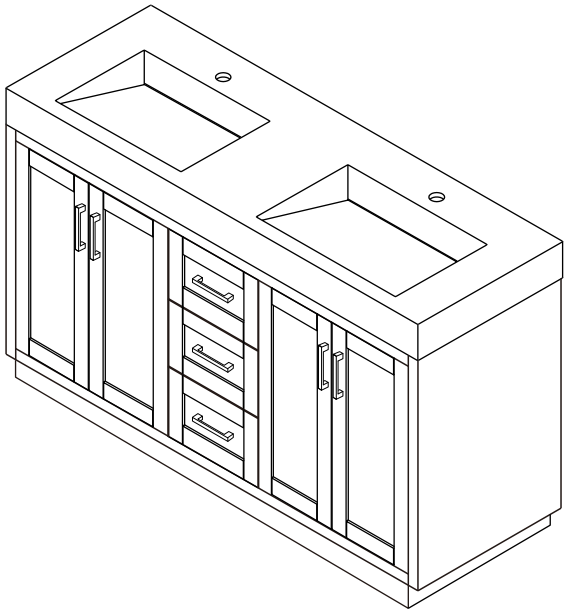

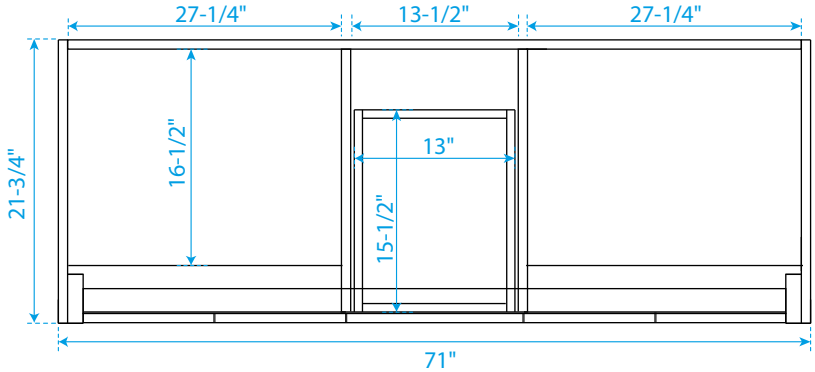

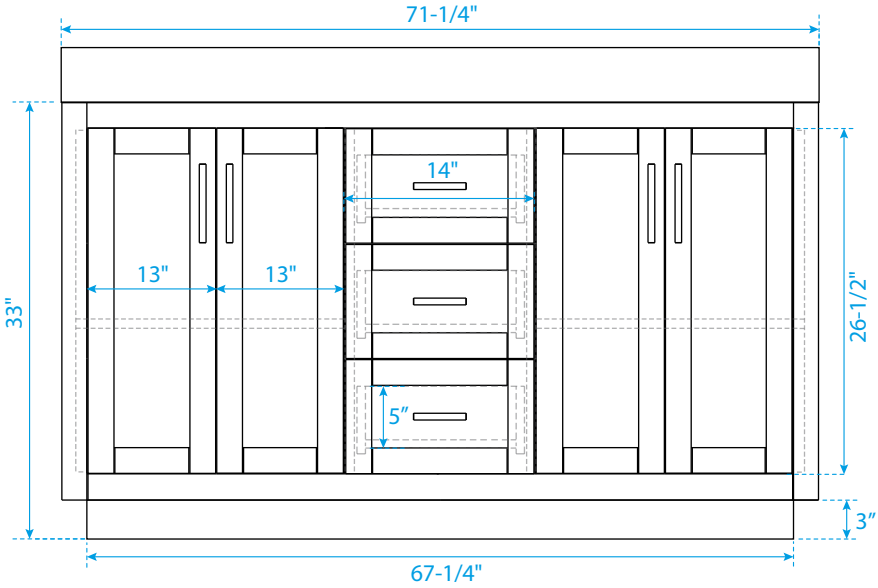

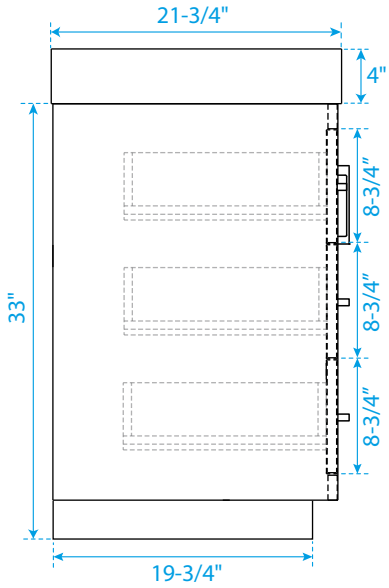

*Note: Due to high probability of breakage, the backsplash comes in two pieces, cut from the same piece. All measurements are ±1/4".

WC-2929-72-DBL

with integrated sinks