WYNDHAM COLLECTION

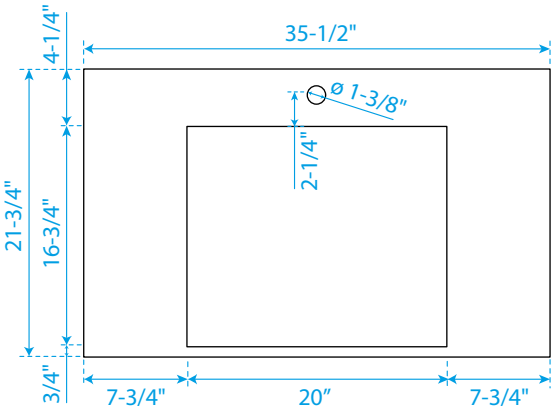

TOP VIEW OF VANITY CABINET

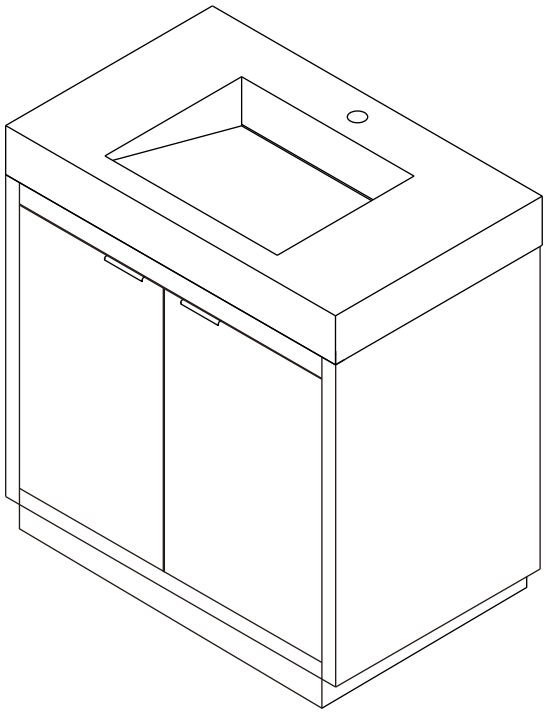

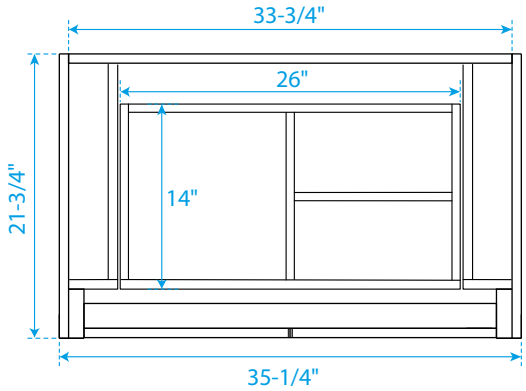

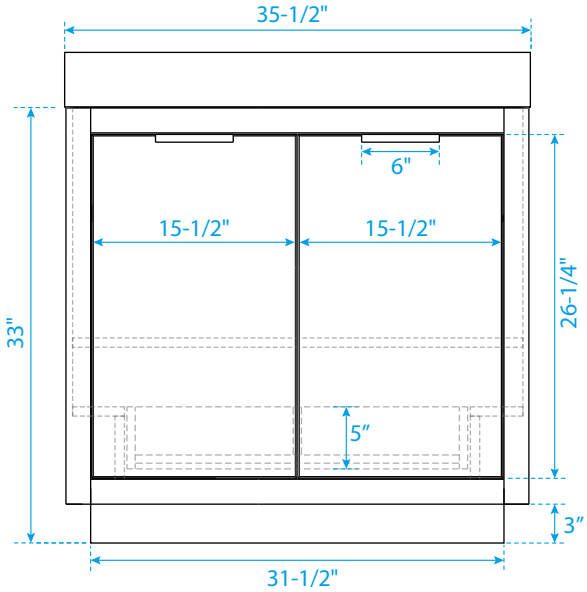

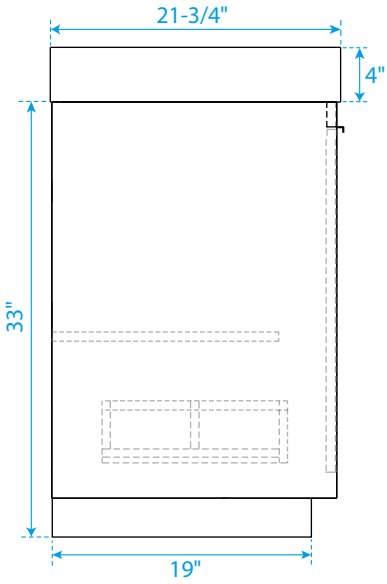

*Note: All measurements are ±1/4".

WC-2828-36-SGL

with integrated sinks