WYNDHAM COLLECTION

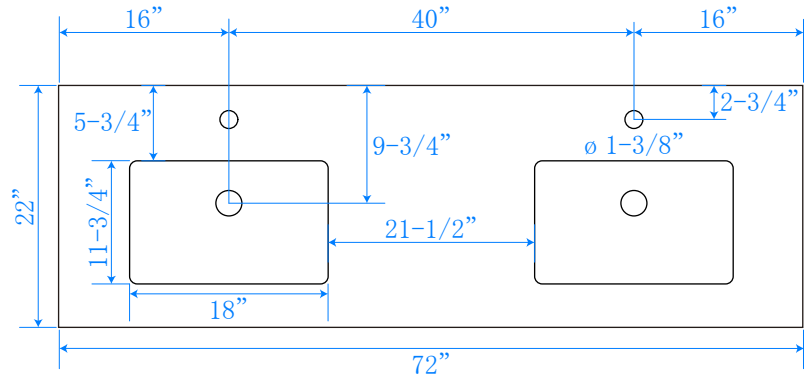

TOP VIEW OF VANITY CABINET

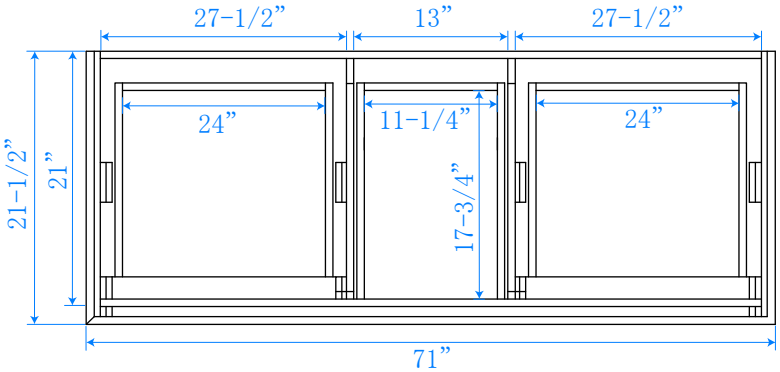

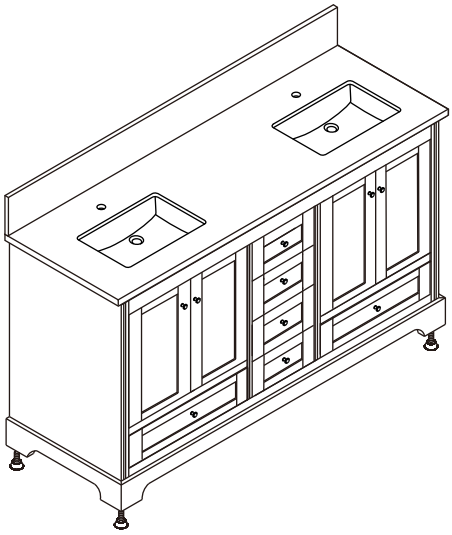

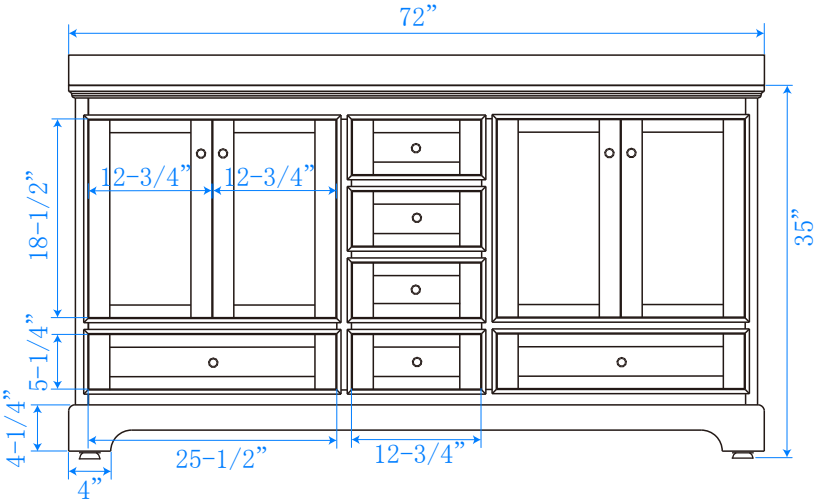

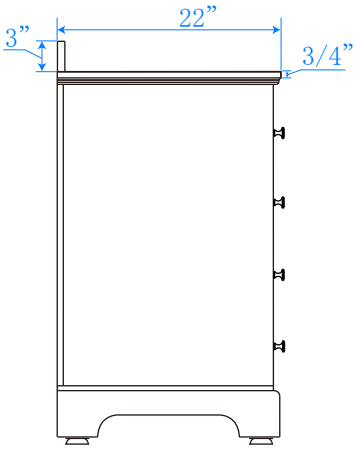

*Note: Due to high probability of breakage, the backsplash comes in two pieces, cut from same piece. All measurements are ± 1/4”.

WC-2020-72-DBL
Quartz