# WYNDHAM COLLECTION

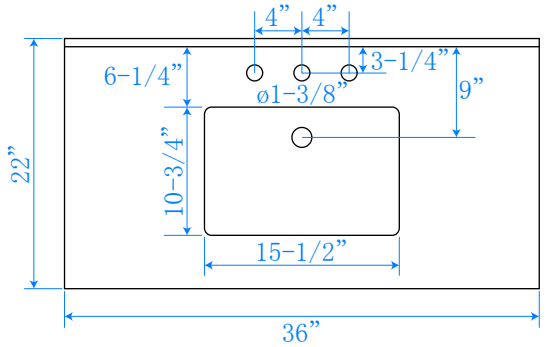


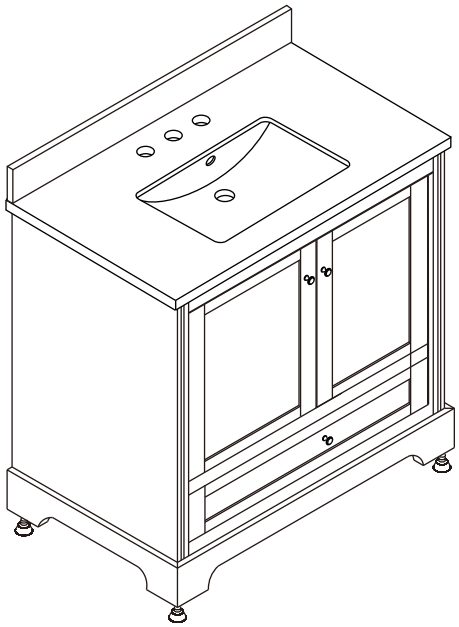

TOP VIEW OF VANITY CABINET

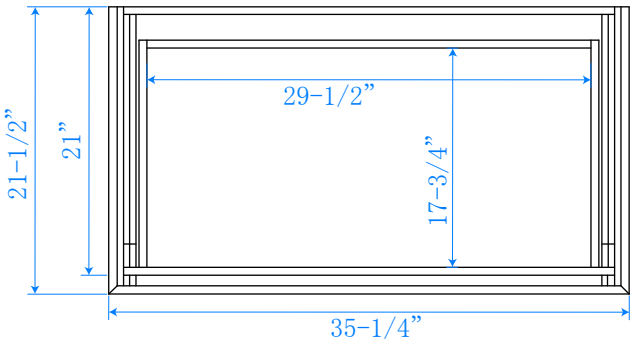


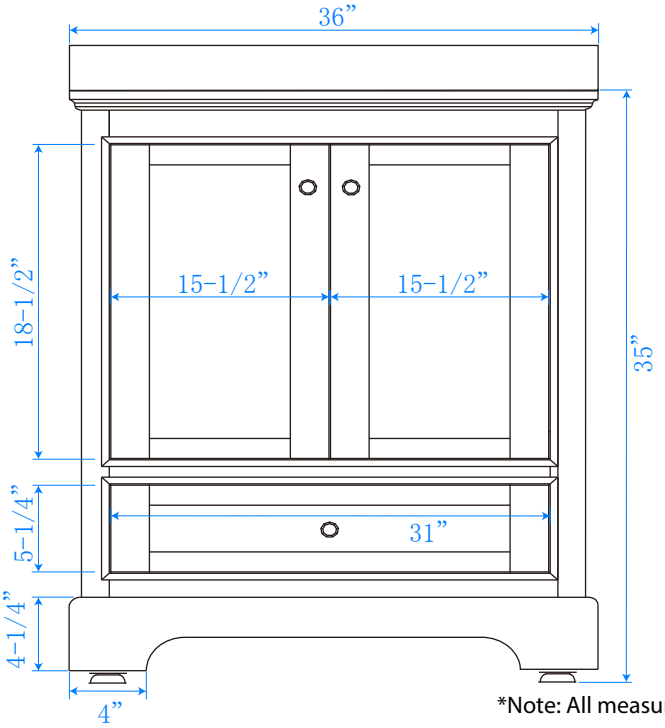


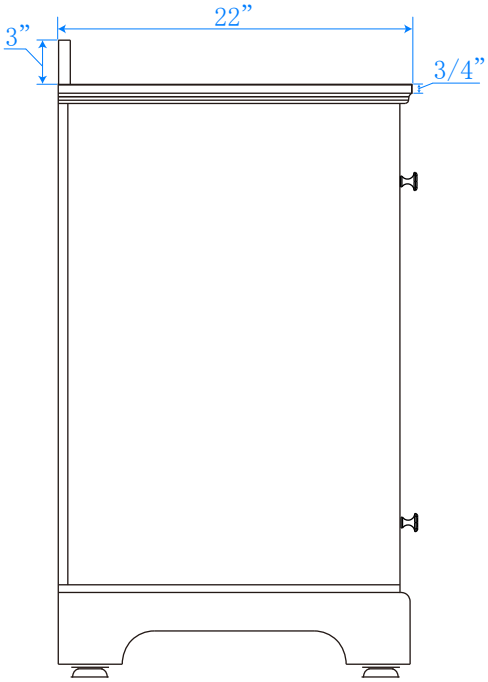


*Note: All measurements are ± 1/4”.

WC-2020-36-SGL-VCA3